ATARI®

OPERATION MANUAL

Model ST300

atarimuseum.nl

Keys Index (Display)

CLEAR KEYS

ON	Power on key	3
OFF	Power off key	3
AC	Clear all key	3
CE/C	Clear indicator/Clear key	3

ENTRY KEYS

0 ~ 9	Numeric Keys	4
.	Decimal point key	4
EXP	Exponential key	4
+/-	Sign change key	4

MODE SELECTION KEYS

INV	Inverse key (INV)	5
FS	Display mode keys	5
FIX	Decimal point selection key	5
DEG / DMS	Degree, Radian, Gradient mode key (DEG RAD GRAD)	6 26

Basic Instruction keys

+ − × ÷ =	Basic function keys	7,8
%	Percent key	7,8
( )	Open, close parentheses keys ( )	7,8
a b/c	Fraction key	8,9
d/c	Mixed/improper fraction conversion key	10

Memory keys

M+	Memory plus key	10,23
MR	Recall memory key	10,23
STM	Store memory key	10,23
X↔M	Display/independent memory change key	10

atarimuseum.nl

Function keys

Square key 12,25
Square root key 12,25
Raising powers key 12,25
Multiple root key 12,26
Reciprocal key 12,26
Cubic root key 12,26
Pi key 12
Factorial key 12,26
Sine/arc sine key 12,24
Cosine/Arc cosine key 12,24
Tangent/arc tangent key 12,24
Natural logarithm key 12,24
Common exponential key 12,25
Common logarithm key 12,24
Exponential function key 12,25
Sexagesimal ↔ decimal conversion key 12,28
Change notation key 7

Statistical keys

Variable Entry/variable correction key 12,30
Sum key 12,30
Square sum key 12,30
Number of data key 12,30
Mean key 12,30
Standard deviation of sample key 12,30
Standard deviation population parameter key 12,30
Open. close statistical key 12, 31

atarimuseum.nl

1. Keys

Power On, OFF and Clear Keys

ON **Power ON Key:** Turns the calculator on or restarts calculation when the display goes out automatically by Automatic Power Off Function. All registers except the memory register are cleared when power is turned on.

- Auto Power Off Function:
  When the calculator is not used for about 10 minutes, the display is automatically turned off to save power.

OFF **Power OFF Key:** Turns off the power supply. This action only clears the display register. (S-80 only)

AC **Clear All Key:** For clearing all the entries and results, including memory contents. Depress this key before starting calculation. (S-81 only)

C/CE **Clear Indicator/Clear Key:** When the C/CE key is pressed right after entering numbers, it clears those numbers just entered.

- When the C/CE key is pressed after the [+], [−], [×], [÷], or [=] key, or when it is pressed twice successively, it clears the contents of all registers except the memory.

atarimuseum.nl

- **Register and Memory Cleared by Each Key Operation**

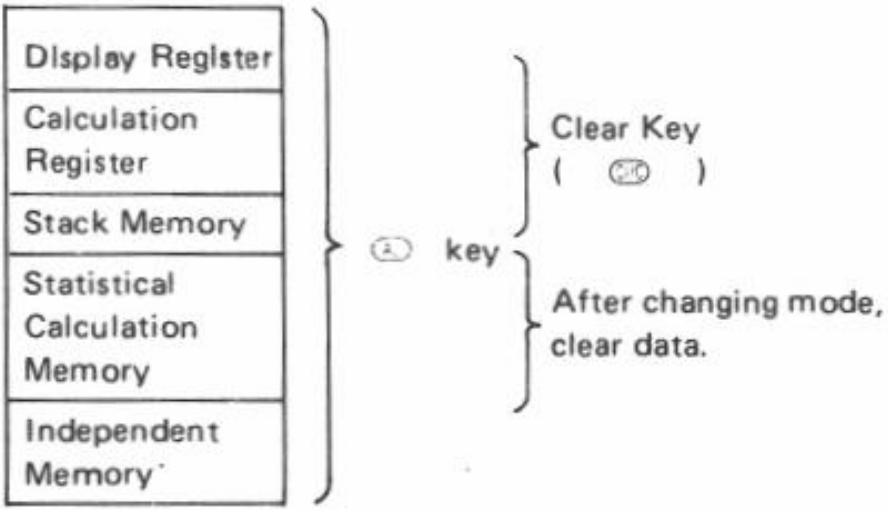

Numeric Entry Keys

[0] ~ [9] **Numeric Keys:** Enter numbers.

[·] **Decimal Point Key:** Enters a decimal point.

[EXP] **Exponential Key:** Used to enter exponents.

Example: $35 \times 10^{43} \rightarrow$ [3] [5] [EXP] [4] [3]

(35.43)

[+/-] **Sign Change Key:** For changing the sign (+ or −) of the displayed mantissa and exponents.

Mode Selection Keys

(INV) **Inverse Key:** For performing functions indicated above the keys. These functions are shown with asterisks (*) in the explanations below.

Example: $\sin^{-1} 0.5 \rightarrow$ [·] [5] (INV) [sin⁻¹]

atarimuseum.nl

[FS] **Display Mode Key:** Changes the display mode. The display mode rotates each time when this key is depressed as follows.

[FS] { ..... Floating Mode
..... Scientific Exponential Mode

Example:

Key Operation	Display	Explanation
[1] [2] [3] [4] [5]		Floating Mode
[6] [7] [×]		
[1] [0] [=]	12345670.	
[FS]	1.23456^{07}	Scientific Exponential Mode

- Display Range
  Scientific Exponential Mode ..... $x=0$
  and $10^{-99} \leqslant |x| < 10^{100}$
  Exponent: Multiple of 3
  Mantissa: Less than 1000
- In the floating mode the calculation results are displayed as follows:
  $10^{10} \leqslant |x| < 10^{100}$ ..... Exponential Display
  $10^{-99} \leqslant |x| < 10^{-9}$ ..... Exponential Display
  $x=0$ and $10^{-9} \leqslant |x| < 10^{10}$ ..... Floating Display

atarimuseum.nl

[F/E] * **Decimal Point Selection Key:** Specifies the number of decimal digits in the mantissa of the decimal calculation results. Depressing the [0] ~ [7] or [·] keys after this key specifies the number of decimal digits as follows:

(INV) [F/E] [0] . . . . . 0 decimal digits

(INV) [F/E] [1] . . . . . 1 decimal digit

(INV) [F/E] [7] . . . . . 7 decimal digits

(INV) [F/E] [·] . . . . . Resets the decimal specification

Example:

Key Operation	Display	Explanation
(%) [F/E] [3]	0.000	3 digits decimal
[1] [2] [3] [4] [5]		
[6] [7] [8] [×] [·]	12345678	
[0] [0] [1] [=]	12345.678	
(%) [F/E] [0]	12346.*1	0 digit decimal
(INV) [F/E] [5]	12345.678*2	5 digits decimal

*1 The displayed value is rounded up within the specified range, but the actual calculation result is retained in the register.

*2 The number is displayed with left justification. In this case, 5 decimal digits are specified, but only the 8 most significant digits are displayed. From the 4th decimal digit is not displayed.

(°'") **Degree/Radian/Gradient Mode Key:** For Changing angle units.

* **Angle Unit Conversion Key:** For converting angle values to different units when used with the (INV) key.

atarimuseum.nl

- The relationship of units is:
  $200^{GRAD} = 180° = \pi^{RAD}$

[C.N] **Change Notation Key:** Scientific notation calculation and change notation operation.

Example: $(72.5 \times 10^{20} + 1.75 \times 10^{20}) \div (-4.7 \times 10^{-11}) = -1.5797872 \times 10^{32}$

operation	Display
[(] [7] [2] [·] [5] [EXP] [2] [0] [+]	7.25 21 (EXP)
[1] [·] [7] [5] [EXP] [2] [0] [)]	7.425 21 (EXP)
[÷] [4] [·] [7] [+/-] [EXP] [1] [1] [+/-]	−4.7 − 11 (EXP)
[=]	−1.57978 32 (EXP)
[INV] [C.N]	−1.5797872

Basic Instruction Keys

[+] [−] [×] [÷] [=] **Basic Function Keys:** Used for basic arithmetic calculation. Press keys as they are written.

[%] ***Percent Key:** Used for percentage, add-on and discount calculations.

- Press this key after entering numeric data to display 1/100 of the input number.

[(] [)] **Open, Close Parentheses Keys:** For performing parentheses calculations where numbers and instructions stored in the register are within 6 levels.

atarimuseum.nl

Example:

2 × (3 + 4) = 14	[2] [×] [(] [3] [+] [4] [)] [=] (14.)
1 + [(4−3.6+5) ×0.8−6] × 4.2 =−6.056	[1] [+] [(] [(] [4] [−] [3] [.] [6] [+] [5] [)] [×] [.] [8] [−] [6] [)] [×] [4] [.] [2] [=] (−6.056)

- However, up to 15 consecutive open parentheses can be used at one time.
  Example: 5 × (((. . . ((4 + 2) × 3) + 8 . . .
  Up to 15 parentheses
- The [(] and [)] keys are always used together. If either key is pressed alone during an operation, the intended result cannot be obtained.
- The [(] key is effective only when depressed immediately after a calculation instruction.
- When [(] is effective, "0" will be displayed. Special parentheses indicator ( ) appears on the display.

< Fractional Calculations >

It enters fractions and calculates both mixed and improper fractions. Answers are given in mixed fractions.

(ab) **Fraction Key:** Use it to enter fractions for both mixed and improper fractions.
When entering improper fractions (A/B):
A (numerator) → (ab) → B (denominator).
When entering mixed fractions (A B/C):
A (integer) → (ab) → B (numerator) → (ab) → C (denominator).
Fraction 2/3 is displayed as <<2⌟3>>, and 1-2/5 as <<1_2⌟5>>.

atarimuseum.nl

Example:

Value	Key Operation	Display
$\frac{2}{3}$	[2]	2.
	[a↔b]	2 ⌋
	[3]	2 ⌋ 3.
	[1]	1.
$1\frac{2}{5}$	[a↔b]	1 ⌋.
	[2]	1 ⌋ 2.
	[a↔b]	1 _ 2 ⌋.
	[5]	1 _ 2 ⌋ 5.

The maximum digits for the improper fractions are up to 6 digits for the numerator and 3 digits for the denominator, totalling 8 digits. The mixed fractions are up to 3 digits for each integer, numerator and denominator but the total must be up to 7 digits.

- [a↔b] key can convert the results of the fractional calculations to the decimal expression, and vice versa. However, the value in the memory, even after converting to the decimal, is stored in the fractional expression.

Example: Calculate $1\,{}^{2}/_{3} + 4\,{}^{5}/_{6}$ and convert the result to the decimal expression.

Operation	Display
[1] [a↔b] [2] [a↔b] [3] [+]	1 _ 2 ⌋ 3.
[4] [a↔b] [5] [a↔b] [6] [=]	6 _ 1 ⌋ 2.
[a↔b]	6.5
[a↔b]	6 _ 1 ⌋ 2.

atarimuseum.nl

***Mixed/Improper Fraction Conversion Key**

It converts mixed fractions to improper fractions, and vice versa. It changes alternatively at each time when the key is pressed.

Example: Enter 10/3 and convert to the mixed fraction.

Operation	Display
1 0 ÷ 3	10 ⌟ 3.
INV a/c −	3 _ 1 ⌟ 3.
INV a/c	10 ⌟ 3.

Memory Keys

Memory Plus Key: For adding numbers to the independent memory.

Recall Memory Key: For recalling the independent memory contents.

Store Memory Key: For storing the display numbers in the independent memory. The former contents will be erased.

***Display/Independent Memory Change Key:** For exchanging the displayed number with the contents of the independent memory or vice versa.

atarimuseum.nl

Examples Using the Independent Memory

Operation	Display	Contents of the Independent Memory	Explanation
1 2 3	123.	0	
M+	123.	123	Stores 123
4 5 6 M+	456.	579	Adds 456
MR	579.	579	Read from memory
7 8 9 SM	789.	789	Stores 789
3 6 9	369.	789	
INV X⇄M	789.	369	Display ↔ Memory
C/CE	0.	369	Clear display
SM	0.	0	Clear memory

atarimuseum.nl

Function Keys

For details of function calculations, refer to **36** Function Calculations.

- Sine Key
- *Arc Sine Key
- Cosine Key
- *Arc Cosine Key
- Tangent Key
- *Arc Tangent Key
- Natural Logarithm Key
- Common Logarithm Key
- *Exponential Function Key
- *Common Exponential Key
- Square Key
- *Square Root Key
- Reciprocal Key
- *Cubic Root Key
- *Sexagesimal → Decimal Conversion Key
- *Decimal → Sexagecimal Conversion Key
- Raising to Power Key
- Multiple Root Key
- *Pi Key
- *Factorial Key

Statistical Keys

- Variable Entry (SUM)
- *Variable Correction (DLT) Key

- *Σx Key
- *Σx^2 Key
- *n Key
- *$\bar{x}$ Key
- *σ^{n-1} Key
- *σ^n Key
- Open. close statistical key

atarimuseum.nl

2. Display Indicators

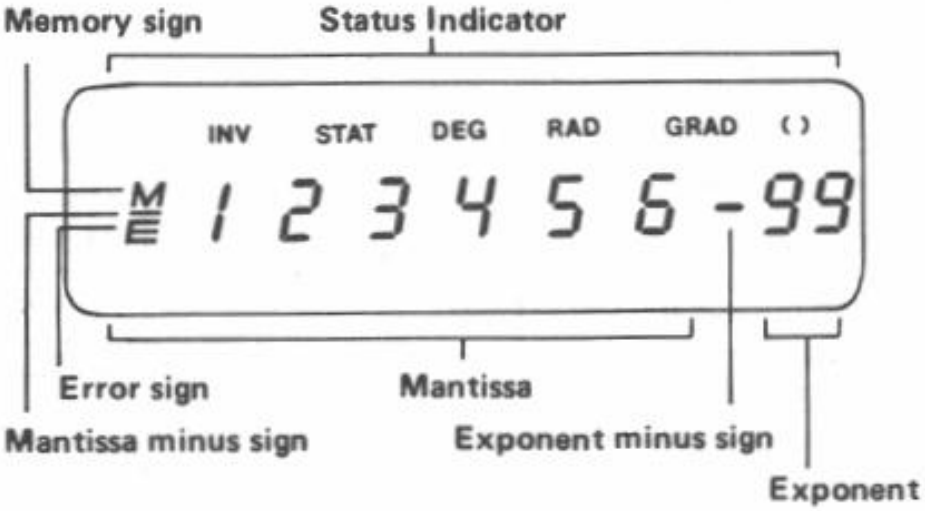

INV	:Inverse
STAT	:Statistic Mode
DEG	:Degree Mode
RAD	:Radian Mode
GRAD	:Gradient Mode
( )	:Calculation in Parentheses

atarimuseum.nl

3. Modes

Calculations in Each Mode

Calculation \ Mode		Decimal (DEC)	Statistical (STAT)
General Calculation	Basic calculation +, −, x, ÷	4 levels ○	1 levels ○
	Calc. incl. Parentheses ( )	(15) ○	X
	Constant Calculation	○	○
	Percentage Calculation %	○	○
	Fractional Calculation a•b/c, d/c	○	○
Memory Calculation	Independent Memory M+, MR, SM, X → M	○	○
Function Calculation	One-variable function calculation	○	○
	a^x, $\sqrt[x]{\ }$	○	○
Statistical Calculation	one-variable statistical culculation	X	○
Entry	0 ~ 9	○	○
	•, EXP, +/− key	○	○
Clear	CI/C key	○	○
Change	F•S, CN, FIX	○	○
Angle	DRG, DRG▸	○	○

atarimuseum.nl

4. Calculation Procedure

Calculation Priority

The calculation procedure priority is automatically determined by the calculator. This means that algebraic expressions can be entered just as they are written. The calculation priority is presented as follows:

High Priority ↑

- One-variable function
- Calculation in ( )
- a^x, $\sqrt[x]{\ }$
- ×, ÷
- +, −

Example:

Calculation Order

$$5 \div 4^2 \times 7 + 3 \times 0.5^{\cos 60^\circ} = 4.3088203$$

Mode: DEG

Operation	Display	
[5] [÷]	(5.)	
[4] [x^y]	(16.)	①
[×]	(0.3125)	②
[7] [+]	(2.1875)	③
[3] [×]	(3.)	
[·] [5] [x^y]	(0.5)	
[6] [0] [cos]	(0.5)	④
[=]	(4.3088203)	⑦

atarimuseum.nl

Levels

During actual calculation, lower priority calculations are stored in the stack memory and then processed in turn. This stack memory can store up to 6 levels of calculations.

Example: $1 + 2 \times (\sin 30^\circ + 6 \times 2) =$

levels ① ② ③ ④

5. Calculation Range

Decimal Numbers

A maximum of 8 digits in the mantissa, or 8 digits in the mantissa with 2 digits in the exponent, can be entered or displayed. A negative value is indicated by adding a minus (−) sign. The calculation range is defined as follows:

	$+1 \times 10^{100}$	↑ Out of Range
Positive Value	$+9.9999999 \times 10^{99}$	Calculation Range
	$+1 \times 10^{-99}$	
	0	
	-1×10^{-99}	
Negative Value	$-9.9999999 \times 10^{99}$	
	-10×10^{100}	↓ Out of Range

atarimuseum.nl

- If the result of a calculation is out of the above range, an error occurs.

6. How to Perform Statistical Calculations

Clearning All Registers Before Calculation

Press the INV and STAT keys to set to the statistical mode. This will clear all function commands and all registers except the memory reigster.
As the results of statistical calculations are accumulated in the statistical calculation memory, statistical calculations can be performed again by exiting to another mode and then reset the calculator for the statistical calculation mode.

Entering Statistical Data

Example 1: [2] [SUM] [3] [SUM] [4] [SUM]
Example 2: [1] [2] [5] [log] [SUM] [1] [0] [0] [log] [SUM]
Example 3: ([1] [2] [3] [M+]) [MR] [SUM]

Operations Not Available

Operations not available are:

- When the number of calculation nesting levels exceeds 3.

atarimuseum.nl

Correcting Statistical Data

Example 1: [1] [SUM] [2] [SUM] [4] [SUM] [3] [SUM]

Example 2: [1] [SUM] [2] [SUM] [3] [SUM] [3] [INV] [DLT]

Example 3: [1] [SUM] [2] [SUM] [3] [SUM] [1] [INV] [DLT]

Example 4: [2] [·] [3] [SUM] [1] [·] [8] [SUM] [2] [·] [2] [SUM] [5] [·] [4] [SUM]

[INV] [x̄] (2.925)

[5] [·] [4] [INV] [DLT] [INV] [x̄] (2.1)

Output of Statistical Calculation Results

Output	Operation	Equation
Mean	[INV] [x̄]	$\bar{x} = \sum_{i=1}^{n} xi/n$
Standard deviation of sample	[INV] [σn-1]	$\sigma^{n-1} = \sqrt{\sum_{i=1}^{n} (xi-\bar{x})^2/(n-1)}$
Standard deviation population parameter	[INV] [σn]	$\sigma^{n} = \sqrt{\sum_{i=1}^{n} (xi-\bar{x})^2/n}$
Variance of sample	[INV] [σn-1] [x²]	$V^{n-1} = \sum_{i=1}^{n} (xi-\bar{x})^2/(n-1)$
Variance of population	[INV] [σn] [x²]	$V^{n} = \sum_{i=1}^{n} (xi-\bar{x})^2/n$
Sum	[INV] [Σx]	Σx
Square sum	[INV] [Σx²]	Σx^2

● [n] key (number of data).

atarimuseum.nl

7. Errors

The calculator will overflow in the following instances; further calculations will not be possible as the calculator will be electronically locked:

1. When the calculation result is outside the following range:
   $x=0{,}1 \times 10^{-99} \leqslant |x| \leqslant 9.9999999 \times 10^{99}$
   x: Calculation result
2. When the contents of the memory are outside the following range:
   $x=0{,}1 \times 10^{-99} \leqslant |x| \leqslant 9.9999999 \times 10^{99}$
   x: Memory contents
   (The data stored before the overflow error is retained.)
3. When numbers are entered outside the following range and a basic function key (⊡ , ⊡ , ⊡ , ⊡) is depressed.
   $x=0{,}1 \times 10^{-99} \leqslant |x| \leqslant 9.9999999 \times 10^{99}$
4. When a ÷ 0 (division with 0 as a divisor) is performed.
5. When data exceeds the range of any function or statistical calculation.
6. In the statistical calculation mode, if σ^{n-1} is calculated with only one data.
   (1) To find x, σ^n and σ^{n-1} when n=0.
   (2) When $n < 0$ or $n \geqslant 10^{10}$
7. When the number of operation stored in the calculator during parentheses and arithmetic calculation exceeds 6 levels.
8. When more than 15 open parentheses are used at one time.

atarimuseum.nl

- The overflow display is: E 0
  Clear the overflow error by depressing the [C/CE] key.

Calculation Examples

Decimal Calculations

[Mode setting]

Decimal Point : Reset [ON] [F/S] [.]

Expression	Operation (Display)
Addition and Subtraction	
8 + 3 + 5.5 = 16.5	[8] [+] [3] [+] [5] [.] [5] [=] (16.5)
4 − 7 − 3 = −6	[4] [−] [7] [−] [3] [=] (−6.)
Multiplication and Division	
3.6 × 1.7 = 6.12	[3] [.] [6] [×] [1] [.] [7] [=] (6.12)
592 ÷ 4.8 = 123.33333	[5] [9] [2] [÷] [4] [.] [8] [=] (123.33333)
Mixed Calculations	
3 + 5 × 7 = 38	[3] [+] [5] [×] [7] [=] (38.)
6 × 9 + 3 ÷ 2 = 55.5	[6] [×] [9] [+] [3] [÷] [2] [=] (55.5)

atarimuseum.nl

Exponential Calculations

$(321 \times 10^{-14}) \times (65 \times 10^{28}) = 2.0865 \times 10^{18}$	3 2 1 EXP 1 4 +/- × 6 5 EXP 2 8 = (2.0865 18)

Fractional Calculations

$\frac{2}{3} + 3\frac{4}{7} - \frac{5}{4} = 2\frac{83}{84}$	2 a b/c 3 + 3 a b/c 4 a b/c 7 = 5 a b/c 4 = (2_83_84.)
$(\frac{3}{5} + 2\frac{3}{8}) \times \frac{2}{5} \div 2 - 1 = -\frac{81}{200}$	(3 a b/c 5 + 2 a b/c 3 a b/c 8) × 2 a b/c 5 ÷ 2 a b/c 1 = (–81_200.)

Constant Calculations

$2 + \underline{3} = 5$ $4 + \underline{3} = 7$	2 + 3 = (5.) 4 = (7.)
$1 - \underline{2} = -1$ $2 - \underline{2} = 0$	1 = 2 − (–1.) 2 = (0.)
$3 \times \underline{2} = 6$ $4 \times \underline{2} = 8$	3 × 2 = (6.) 4 = (8.)
$6 \div \underline{3} = 2$ $9 \div \underline{3} = 3$	6 ÷ 3 = (2.) 9 = (3.)

- In constant addition, the addend
  In constant subtraction, the subtrahend
  In constant multiplication, the multiplier
  In constant division, the divisor

  } is automatically specified as the constant.

atarimuseum.nl

Parentheses Calculations

$3 + [(4 - 3.6 + 5) \times 0.8 - 6] \times 4.2$ $= -4.056$	3 + ((4 − 3 . 6 + 5) × . 8 − 6) × 4 . 2 = (−4.056)

Percentage Calculations

$200 \times 17\% = 34$	2 0 0 × 1 7 INV % = (34.)
$\frac{456}{789} = 57.794677\%$	4 5 6 ÷ 7 8 9 INV % = (57.794677)

Add-On Calculations

$200 + (200 \times 20\%) = 240$	2 0 0 + 2 0 INV % = (240.)

Discount Calculations

$200 - (200 \times 20\%) = 160$	2 0 0 − 2 0 INV % = (160.)

atarimuseum.nl

Constant Percentage Calculations

1200 × 12% = 144	[1][2][0][0][×][1][2] (144.) [INV][%][=]
1500 × 12% = 180	[1][5][0][0] [=] (180.)
$\frac{765}{987}$ = 77.507599%	[7][6][5][÷][9][8][7][INV][%][=] (77.507599)
$\frac{654}{987}$ =66.261398%	[6][5][4] [=] (66.261398)

Memory Calculations

	[0][SM] (0.)
20 × 30 = 600	[2][0][×][3][0][=][M+] (M 600.)
40 × 50 = 2000	[4][0][×][5][0][=][M+] (M 2000.)
+) 15 × 20 = 300	[1][5][×][2][0][=][M+] (M 300.)
2900	[MR] (M 2900.)
−) 125 × 40 = −5000	[1][2][5][×][4][0][=][+/−][M+] (M−5000.)
−2100	[MR] ([C/CE][SM]) (M−2100.)

Composition Ratio Calculations

%	[1][2][5][+][1][8][5][+][1][9][0] [=][SM]
A 125 (25)	(M500.)
B 185 (37)	[1][2][5][÷][MR][INV][%][=][SM] (M 25.)
C 190 (38)	[1][8][5][=][M+] (M 37.)
(500) (100)	[1][9][0][=][M+] (M 38.)
	[MR] ([C/CE][SM]) (M100.)

atarimuseum.nl

Basic Function Calculations

Trigonometric Functions

$\sin 53^\circ = 0.7986355$	[DEG] 5 3 sin (0.7986355)
$\tan 65^{GRAD} = 1.6318517$	[GRAD] 6 5 tan (1.6318517)
$\sin \frac{\pi}{3}^{RAD} = 0.8660254$	[RAD] π ÷ 3 = sin (0.8660254)

Inverse Trigonometric Functions

$\sin^{-1} 0.3 = 17.457603^\circ$	[DEG] · 3 INV sin⁻¹ (17.457603)
$\cos^{-1} 0.8 = 36.869898^\circ$	[DEG] · 8 INV cos⁻¹ (36.869898)
$\tan^{-1} 1.5 = 56.309932^\circ$	[DEG] 1 · 5 INV tan⁻¹ (56.309932)
$\sin^{-1} 1 = 1.5707963$ (rad)	[RAD] 1 INV sin⁻¹ (1.5707963)

Logarithmic Functions

$\log 123 = 2.0899501$	1 2 3 log (2.0899051)
$\ln 123 = 4.8121844$	1 2 3 ln (4.8121844)

atarimuseum.nl

Exponential Functions

$e^2 = 7.3890561$	2 INV e^x (7.3890561.)
$10^{2.3} = 199.52623$	2 . 3 INV 10^x (199.52623)

Square Calculations

$1.25^2 = 1.5625$	1 . 2 5 x^2 (1.5625)

Power Calculations

$5.43^3 = 160.10301$	5 . 4 3 y^x 3 = (160.10301)
$2^{3.4} = 10.556063$	2 y^x 3 . 4 = (10.556063)

Constant Power Calculations

$2^{2.34} = 5.0630264$	2 y^x 2 . 3 4 = (5.0630264)
$3^{2.34} = 13.075664$	3 = (13.075664)
$4^{2.34} = 25.634236$	4 = (25.634236)

Extraction of Square Root

$\sqrt{(5+6) \times 7} =$ 8.7749644	(5 + 6) × 7 = $\sqrt{x}$ (8.7749644)

atarimuseum.nl

Multiple Root

$\sqrt[5.3]{100} = 2.3842868$	[1] [0] [0] [INV] [$\sqrt{\ }$] [5] [·] [3] [=] (2.3842868)

Extraction of Cubic Root

$\sqrt[3]{123} = 4.9731898$	[1] [2] [3] [INV] [$\sqrt{\ }$] (4.9731898)

Reciprocal Calculations

$\frac{1}{2 \times 3 + 4} = 0.1$	[2] [×] [3] [+] [4] [=] [INV] [1/x] (0.1)

Factorial Calculations

$(4 \times 2 - 3)! = 120$	[4] [×] [2] [−] [3] [=] [INV] [n!] (120)

Trigonometric Calculations

$\text{cosec } x = \frac{1}{\sin x}$ $\text{cosec}45° = 1.4142136$	[DEG] [4] [5] [sin] [INV] [1/x] (1.4142136)

Degree → Radian Conversion

$60° = 1.0471976^{RAD}$	[6] [0] [INV] [DMS] (1.0471976)

Radian → Gradient Conversion

$2^{RAD} = 127.32395^{GRAD}$	[RAD] [2] [INV] [DMS] (127.32395)

atarimuseum.nl

Gradient → Degree Conversion

$120^{GRAD} = 108°$	[GRAD] 1 2 0 INV DRG+ (108.)

Logarithmic Mean

$\bar{L} = \dfrac{4-8}{\ln 4 - \ln 8}$ $= 5.7707802$	1 4 − 8) ÷ (4 ln − 8 ln) = (5.7707802)

Geometric Mean

$\bar{G} = \sqrt[4]{1.23 \times 1.48 \times 1.96 \times 2.2}$ $= 1.6738302$	1 . 2 3 × 1 . 4 8 × 1 . 9 6 × 2 . 2 = INV $\sqrt[x]{y}$ 4 = (1.6738302)

Permutation

${}_nP_r = \dfrac{n!}{(n-r)!}$ ${}_5P_3 = \dfrac{5!}{(5-3)!} = 60$	5 INV n! ÷ (5 − 3) INV n! = (60.)

Combinations

${}_nC_r = \dfrac{n!}{r!(n-r)!}$ ${}_5C_3 = \dfrac{5!}{3! \times (5-3)!}$ $= 10$	5 INV n! ÷ (3 INV n! × (5 − 3) INV n!) = (10.)

atarimuseum.nl

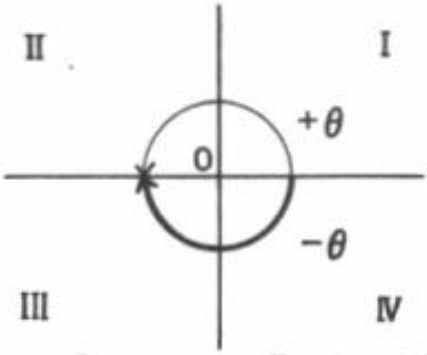

Degrees-Minutes-Seconds → Decimal Degrees

123° 45′06″ → 123.75167°	1 2 3 · 4 5 0 6 °'" (123.75167)

Decimal Degrees → Degrees-Minutes-Seconds

2.3456° → 2° 20′44.16″	2 · 3 4 5 6 INV °'" (2.20 44 16)

atarimuseum.nl

Applied Calculations

[Electricity]

Electrical Circuit Problem

Obtain the voltage Vc at both terminals of the condenser at t= 56 m sec.

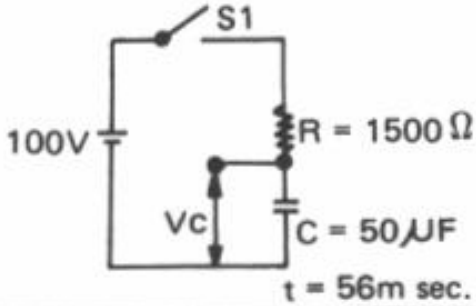

$$Vc = Vi\,(1 - e^{-\frac{1}{RC}})$$

$$= 100 \times (1 - e^{-\frac{56 \times 10^{-3}}{1500 \times 50 \times 10^{-6}}}) = 52.605626$$

[1] [0] [0] [×] [(] [1] [−] [(] [1] [5] [0] [0] [×] [5] [0] [EXP] [6] [+/−] [÷]
[5] [6] [EXP] [3] [+/−] [)] [INV] [ln] [+/−] [INV] [e^x] [)] [=]

(52.605626)

[Algebra]

The Root of a Quadratic Equation (Only for problems having a real root)

$$4x^2 + 9x + 2 = 0$$

$$x = \frac{-b \pm \sqrt{b^2 - 4ac}}{2a} = \frac{-9 \pm \sqrt{9^2 - 4 \times 4 \times 2}}{2 \times 4}$$

$$x = \begin{cases} -0.25 \\ -2 \end{cases}$$

[9] [x!] [−] [4] [×] [4] [×] [2] [=] [SM] (M 49.)
[(] [9] [+/−] [+] [MR] [√] [)] [÷] [2] [÷] [4] [=] (M −0.25)
[(] [9] [+/−] [−] [MR] [√] [)] [÷] [2] [÷] [4] [=] (M −2.)

atarimuseum.nl

Statistical Calculations

Calculate the number (n), mean value ($\bar{x}$), standard deviation sample (σ^{n-1}), variance (V^{n-1}), standard deviation population parameter (σ^{n}), variance of population (V^{n}), sum (Σx), and square sum (Σx^2), from the data shown.

Statistic

Statistical Calculations (average, standard deviation)

You bought 20 large sized pizza for the party. The large is supposed to be 30 cm diameter. Their sizes were, however, varied as shown below.

Diameter (cm)	Midpoint (cm)	Frequency
27.6 ~ 28.5	28	2
28.6 ~ 29.5	29	4
29.6 ~ 30.5	30	5
30.6 ~ 31.5	31	6
31.6 ~ 32.5	32	3
		20

atarimuseum.nl

Key operation	Display	Explanation
INV STAT	0.	Statistic mode
INV FIX 4	0.0000	
2 8 × 2 SUM	2.0000	Gives the sum of frequency
2 9 × 4 SUM	6.0000	
3 0 × 5 SUM	11.0000	
3 1 × 6 SUM	17.0000	
3 2 × 3 SUM	20.0000	
INV n	20.0000	Total number of data
INV x̄	30.2000	Mean
INV Σx	604.0000	Sum of the values
INV Σx²	18270.000	Standard deviation of sample
INV σn	1.2397	
INV σn	1.2083	Standard deviation of population

atarimuseum.nl

Calculation Range of Functions

Function		Calculation Range
sin x	DEG	$x=0,\ 5.7295779 \times 10^{-98} < \lvert x \rvert \leq 4.4999999 \times 10^{09}$
	RAD	$0 \leq \lvert x \rvert \leq 78539816$
	GRAD	$x=0,\ 6.3661977 \times 10^{-98} < \lvert x \rvert \leq 4.9999999 \times 10^{09}$
cos x	DEG	$0 \leq \lvert x \rvert \leq 4.5000000 \times 10^{09}$
	RAD	$0 \leq \lvert x \rvert \leq 78539817$
	GRAD	$0 \leq \lvert x \rvert \leq 5.0000000 \times 10^{09}$
tan x	DEG	$x=0,\ 5.7295779 \times 10^{-98} < \lvert x \rvert \leq 4.4999999 \times 10^{09}$ $\lvert x \rvert \neq 90^\circ + 180^\circ \times n$
	RAD	$0 \leq \lvert x \rvert \leq 78539816$ $\lvert x \rvert \neq 90^\circ + 180^\circ \times n$
	GRAD	$x=0,\ 6.3661977 \times 10^{-98} < \lvert x \rvert \leq 4.9999999 \times 10^{09}$ $\lvert x \rvert \neq 90^\circ + 180^\circ \times n$

atarimuseum.nl

Function	Input Range
$\sin^{-1} x$	DEG $x=0,\ 1.5707963 \times 10^{-99} < \lvert x \rvert \leq 1$
	RAD $0 \leq \lvert x \rvert \leq 1$
	GRAD $x=0,\ 1.5707963 \times 10^{-99} < \lvert x \rvert \leq 1$
$\cos^{-1} x$	DEG $0 \leq \lvert x \rvert < 1$
	RAD $0 \leq \lvert x \rvert < 1$
	GRAD $0 \leq \lvert x \rvert < 1$
$\tan^{-1} x$	DEG $x=0,\ 1.5707963 \times 10^{-99} < \lvert x \rvert \leq 9.9999999 \times 10^{99}$
	RAD $0 \leq \lvert x \rvert \leq 9.9999999 \times 10^{99}$
	GRAD $x=0,\ 1.5707963 \times 10^{-99} < \lvert x \rvert \leq 9.9999999 \times 10^{99}$
$\ln x$	$0 < x$
$\mathrm{Log}\, x$	$0 < x$
e^x	$-227.95593 < x \leq 230.25850$
10^x	$-99.000001 < x \leq 99.999999$
$n!$	$0 \leq x \leq 69$
$1/x$	$1 \times 10^{-99} \leq \lvert x \rvert \leq 1 \times 10^{99}$
x^2	$x=0,\ 3.1622776 \times 10^{-50} < \lvert x \rvert < 9.9999999 \times 10^{49}$
$\sqrt{x}$	$0 \leq x \leq 9.9999999 \times 10^{99}$
$\sqrt[3]{x}$	$0 \leq \lvert x \rvert \leq 9.9999999 \times 10^{99}$

atarimuseum.nl

a^x	$a > 0,\ -227.95593 \leq x \cdot \ln\lvert a \rvert \leq 230.25850$
$\sqrt[x]{a}$	$a > 0,\ -227.95593 \leq (\ln\lvert a \rvert)/x \leq 230.25850$

- The accuracy in the RAD mode increases close to the zero and divergence points.

Function	Input Range
$a^{\circ\prime\prime} \rightarrow x$	$0 \leq \lvert x \rvert \leq 9.9999999 \times 10^{7}$
$x \rightarrow a^{\circ\prime\prime}$	$x=0,\ 1.3888888 \times 10^{-6} < \lvert x \rvert \leq 9.9999999 \times 10^{7}$
DEG→RAD	$x=0, 5.7295779 \times 10^{-98} < \lvert x \rvert \leq 9.9999999 \times 10^{99}$
RAD→GRAD	$0 \leq \lvert x \rvert \leq 1.5707963 \times 10^{98}$
GRAD→DEG	$x=0,\ 1.1111111 \times 10^{-99} < \lvert x \rvert \leq 9.9999999 \times 10^{99}$
DEL SUM	$\lvert X \rvert \leq 9.9999999 \times 10^{49}$ $\lvert \Sigma X \rvert \leq 9.9999999 \times 10^{99}$ $\Sigma X^2 \leq 9.9999999 \times 10^{99}$ $0 \leq n \leq 99999999$
$\overline{X}$	$n \neq 0$
$\sigma n-1$	$n \neq 1\ n \neq 0$ $0 \leq \dfrac{\Sigma X^2 - [(\Sigma X)^2/n]}{n-1} \leq 9.9999999 \times 10^{99}$
σn	$n \neq 0$ $0 \leq \dfrac{\Sigma X^2 - [(\Sigma X)^2/n]}{n} \leq 9.9999999 \times 10^{99}$

atarimuseum.nl

Power Supply S-81

The S-81 is powered by electricity produced by a built-in solar cell. When the solar cell is exposed to the light, it converts luminous energy into electrical energy, eliminating the need for batteries. The following table describes usable light sources. Illumination must be 50 lx. or more to activate the solar cell.

- Use in a location light enough to read in without eyestrain.
- Use directly below and within 150 cm (59.0 inches) of a 60 watt. an incandescent lamp.
- Use directly below and within 150 cm (59.0 inches) of a 15 watt. an fluorescent lamp where long hours of reading does not cause eyestrain.

Specifications

Display Range:

Exponential Type	Mantissa, 6 digits + exponent, 2digits + sign, 2digits.
Floating Type	Mantissa, 8 digits + sign, 1 digit

Power source: Amorphous silicon solar cell (S-81)
Alkaline battery (LR44) x 2: DC 3V (S-80)

Usable Temperature: 0°C~40°C (32°C ~ 104°F)
Lighting Requirement: 50 lux or more (S-81)
Size: 134mm(L) x 71mm(W) x 9.0mm(H)

atarimuseum.nl

PRINTED IN TAIWAN R.O.C.
MS0806804

atarimuseum.nl

LIMITED WARRANTY

Your Atari Calculator is warranted to the owner for a period of 90 days from date of original purchase against defects in materials and workmanship by ATARI US CORP. not by the dealer from whom it was purchased. This warranty does not apply to batteries. Any implied warranties including merchantabilty and fitness for any particular use are also limited to 90 days from date of original purchase.

If this calculator develops such defect within this period, it will be repaired or replaced (a calculator of equal value and similar appearance will be supplied) at our option if it is returned with a $9.95 check or money order to cover cost of handling. (This is not a repair charge). No additional charges will be made unless the 90 day warranty period has expired or servicing is necessary for reasons beyond our control such as accident, misuse, neglect or replacement of parts not warranted is required such as batteries, in which event a moderate charge will be made.

The above remedy is exclusive. ATARI US CORP. shall not be liable for any incidental or consequential damages.

This warranty is void if the calculator has been tampered with or ill-treated, or if the defect is related to servicing not performed by us.

This warranty gives you specific legal rights and you may also have other rights which may vary from state to state Some states do not allow limitations on how long an implied warranty lasts, or limitations of incidental or consequential damages so the above limitations and exclusions may not apply to you. In the event of a problem with warranty service or performance, you my be able to go Small Claims Court a State Court or a Federal District Court.

MAKE CHECKS OR MONEY ORDER PAYABLE TO:

ATARI US CORP

RETURN WITH CHECK OR MONEY ORDER TO:

8341 E. EVANS SUITE 106

SCOTTSDALE, ARIZONA 85260

atarimuseum.nl

PRINTED IN T. !WAN R.O.C.

MDC506903